# Ruttonsha International Rectifier Ltd.

(EOU DIVISION)

## SILICON CONTROLLED RECTIFIERS

# High Power Thyristor
# Hockey Puk Version
# K-PUK Series 1300 PK

Types : 1300 PK...

1300 PK (K - PUK )

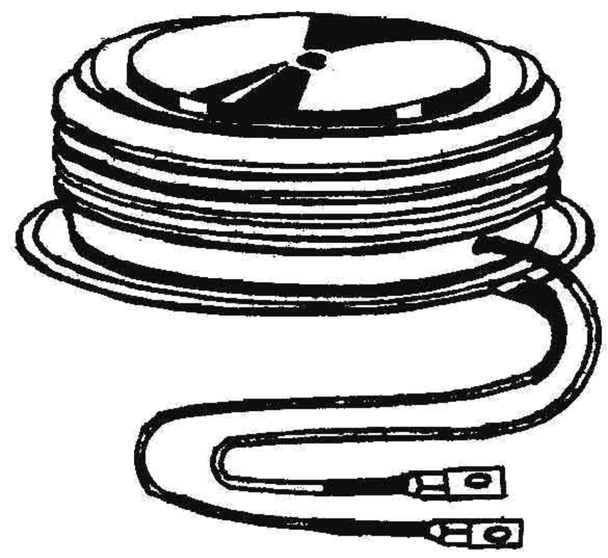

### FEATURES

- *Center amplifying gate.*
- *Metal case with ceramic insulator*
- *High profile hockey - puk.*

### TYPICAL APPLICATIONS

- *DC motor control (e.g. for machine tools).*
- *Controlled rectifiers (e.g. for battery charging, Uninterrupted Power Supply).*
- *AC controllers (e.g. for temperature control, lights control).*

## Major Ratings and Characteristics

| **Parameter** | | 1300PK | Units |
|---|---|---|---|
| $I_{T(AV)}$ | | 1300 | A |
| | @ $T_{hs}$ | 55 | ℃ |
| $I_{T(RMS)}$ | | 2050 | A |
| | @ $T_{hs}$ | 55 | ℃ |
| $I_{TSM}$ | @ 50 Hz | 18 | kA |
| $I^2t$ | @ 50 Hz | 1620 | $KA^2s$ |
| $V_{DRM}/V_{RRM}$ | | 2800 to 3600 | V |
| $t_q$ | typical | 300 | µs |
| $T_J$ | | -40 - 125 | ℃ |

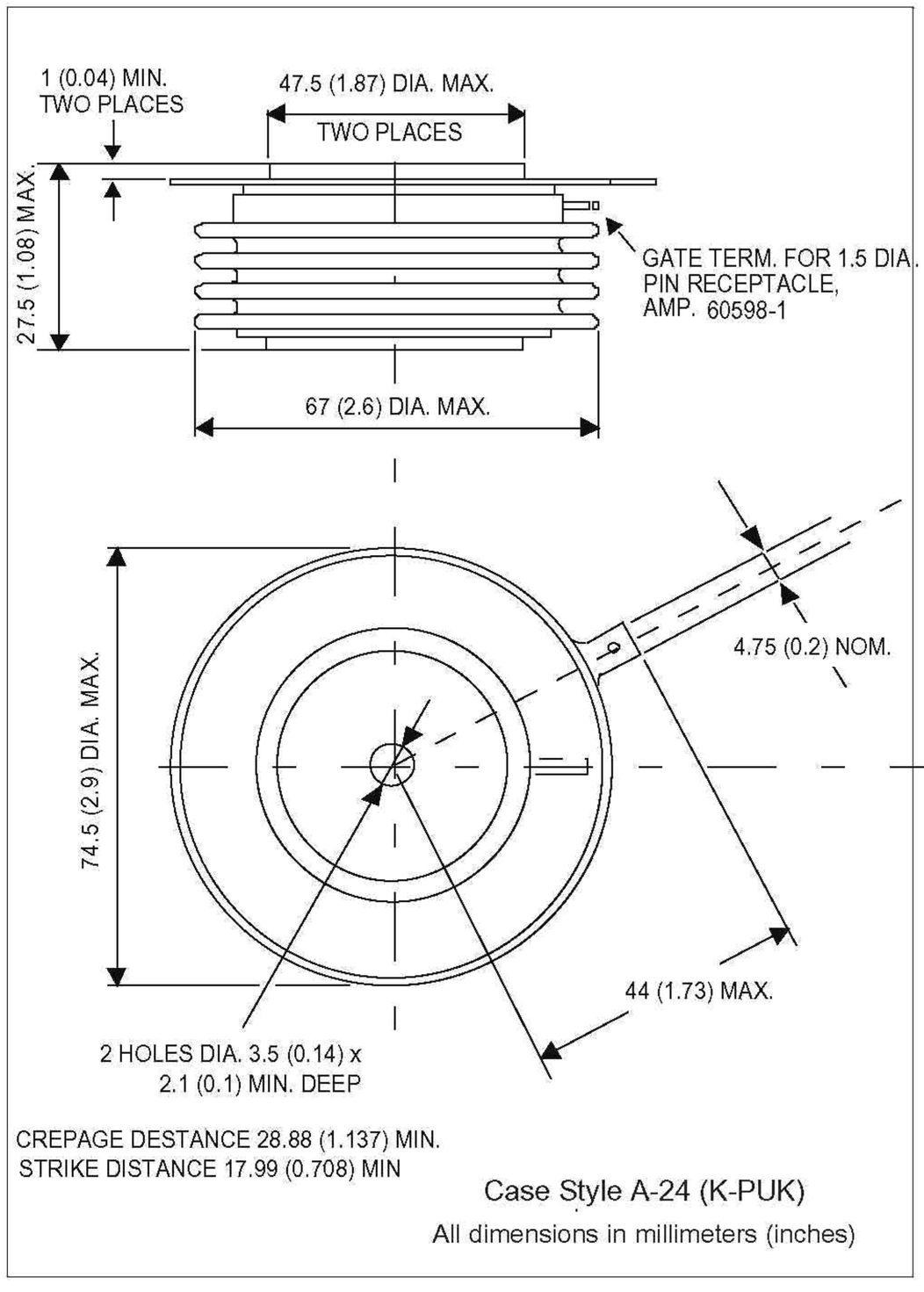


Case Style A-24 (K-PUK)

All dimensions in millimeters (inches)

## ELECTRICAL SPECIFICATIONS

**1300 PK Series**

### Voltage Ratings

| Type number | Voltage Code | $V_{DRM}/V_{RRM}$, max repetitive peak and off-state voltage V | $V_{RSM}$,maximum non-repetitive peak voltage V | $I_{DRM}/I_{RRM}$ max. @ $T_J = T_J$ max. mA |
|---|---|---|---|---|
| 1300PK | 280 | 2800/2800 | 2900 | 100 |
| | 320 | 3200/3200 | 3300 | |
| | 330 | 3300/3300 | 3400 | |
| | 340 | 3400/3400 | 3500 | |
| | 350 | 3500/3500 | 3600 | |
| | 360 | 3600/3600 | 3700 | |

### On - state Conduction

| | Parameter | 1300PK | Units | Conditions | |
|---|---|---|---|---|---|
| $I_{T(AV)}$ | Max. average on-state current | 1300 | A | 180° conduction, half sine wave | |
| | @ Heatsink temperature | 55 | °C | double side cooled | |
| $I_{T(RMS)}$ | Max RMS on-state current | 2050 | kA | DC@55°C heatsink temperature double side cooled | |
| $I_{TSM}$ | Max. peak, one-cycle non-repetitive surge current | 18 | | t = 10 ms | Sinusoidal half wave, Initial $T_J=T_J$ max. |
| $I^2t$ | Maximum $I^2t$ for fusing | 1620 | $KA^2s$ | t = 10 ms | |
| $V_{T(TO)}$ | Threshold voltage | 1.1 Max. | V | $T_J=T_J$ max. | |
| $r_t$ | On-state slope resistance | 0.4 Max. | mΩ | $T_J=T_J$ max. | |
| $V_{TM}$ | Max. on state voltage | 1.7 | V | $I_{PK}$ = 1000A,$T_J=T_J$ max, $t_P$ = 10 ms sine pulse | |
| $I_H$ | Maximum holding current | 300 | mA | $T_J$ = 25°C , anode supply 12 V resistive load | |
| $I_L$ | Typical latching current | 1000 | mA | | |

## 1300 PK Series

### Switching

| | Parameter | 1300PK | Units | Conditions |
|---|---|---|---|---|
| di/dt | Max. non-repetitive rate of rise of turned-on current | 100 | A/µs | Gate drive 20V, 20Ω , $t_r \leq 1\mu s$<br>$T_J=T_J$ max. anode voltage ≤ 80% $V_{DRM}$ |
| $t_q$ | Typical turn-off time | 300 | µs | $I_{TM}$ =1000A, $T_J=T_J$ max. di/dt = 40A/µs ,$V_R$ = 75V<br>dv/dt = 50V/µs, 0.5 $V_{DRM}$ Reapplied , $t_p$ = 500µs |

### Blocking

| | Parameter | 1300PK | Units | Conditions |
|---|---|---|---|---|
| dv/dt | Maximum critical rate of rise of off-state voltage | 500 | V/µs | $T_J = T_J$ max. linear to 80% rated $V_{DRM}$ |
| $I_{RRM}$<br>$I_{DRM}$ | Max. peak reverse and off-state leakage current | 100 | mA | $T_J = T_J$ max. rated $V_{DRM}$ /$V_{RRM}$ applied |

### Triggering

| | Parameter | 1300PK | Units | Conditions |
|---|---|---|---|---|
| $P_{GM}$ | Maximum peak gate power | 16 | W | $T_J = T_J$ max., $t_p \leq 5$ ms |
| $P_{G(AV)}$ | Maximum average gate power | 3.0 | | $T_J = T_J$ max., f = 50Hz, d% = 50 |
| $I_{GM}$ | Max. peak positive gate current | 3.0 | A | $T_J = T_J$ max., $t_p \leq 5$ ms |
| $+V_{GM}$ | Maximum peak positive gate voltage | 20 | V | $T_J = T_J$ max., $t_p \leq 5$ ms |
| $-V_{GM}$ | Maximum peak negative gate voltage | 5.0 | | |
| $I_{GT}$ | DC gate current required to trigger | 250 Max. | mA | $T_J$ = 25°C |
| $V_{GT}$ | DC gate voltage required to trigger | 3.0 | V | $T_J$ = 25°C |
| $I_{GD}$ | DC gate current not to trigger | 10 | mA | $T_J = T_J$ max. Max. gate current/voltage not to trigger is the max. value which will not trigger any unit with rated $V_{DRM}$ anode-to-cathode applied |
| $V_{GD}$ | DC gate voltage not to trigger | 0.25 | V | |

## 1300 PK Series

### Thermal and Mechanical Specifications

| | Parameter | 1300PK | Units | Conditions |
|---|---|---|---|---|
| $T_J$ | Max.operating temperature range | -40 - 125 | °C | |
| $T_{stg}$ | Max.storage temperature range | -40 - 150 | | |
| $R_{thJ-hs}$ | Max. thermal resistance, junction to heatsink | 0.023 | K/W | DC operation double side cooled |
| F | Mounting force, ± 10% | 24.5 | KN | |
| wt | Approximate weight | 550 | g | |
| | Case style | K-PUK | | See Outline Table |

## 1300 PK Series

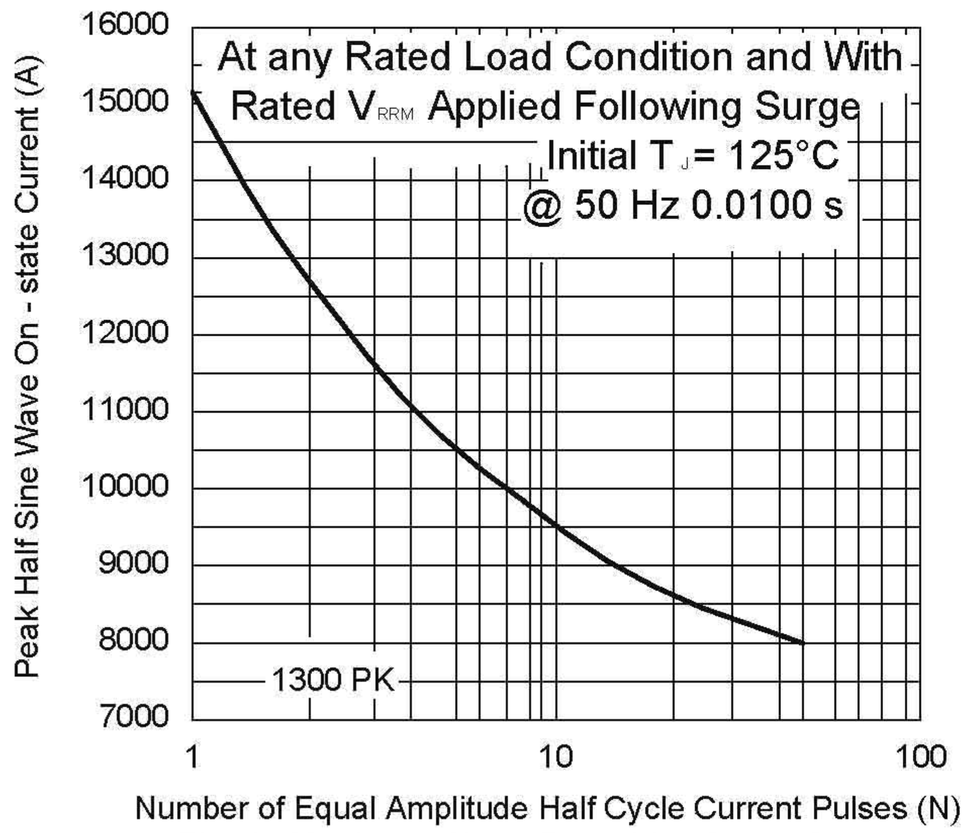


**Fig. 1 - Maximum Non - Repetitive Surge Current**

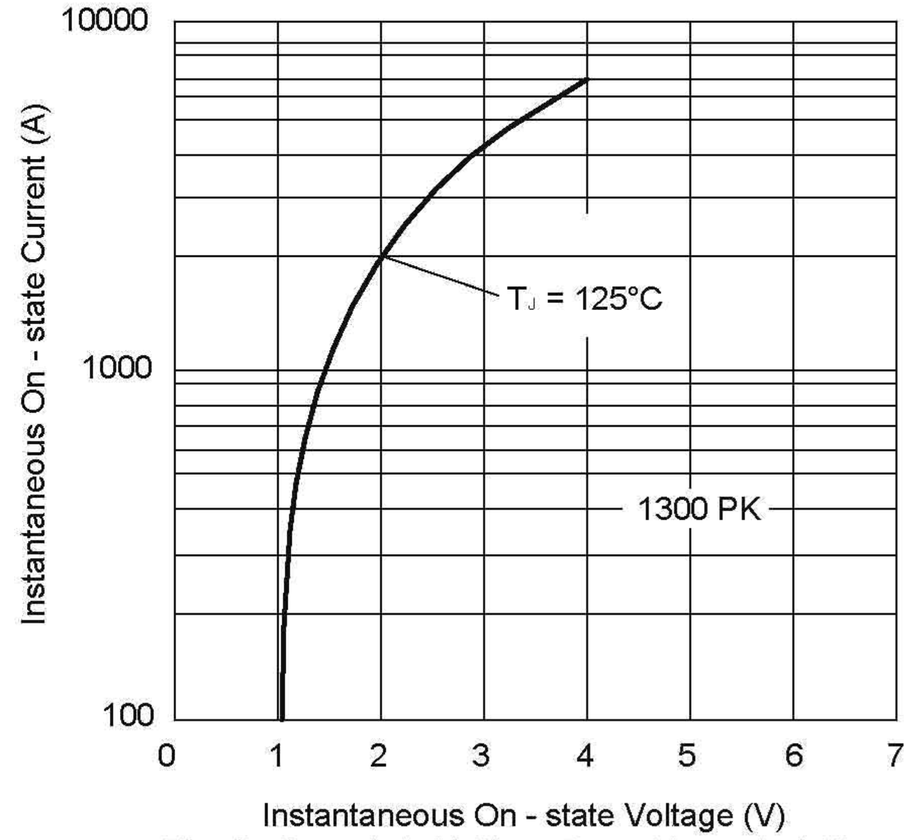


**Fig. 2 - On - state Voltage Drop Characteristics**

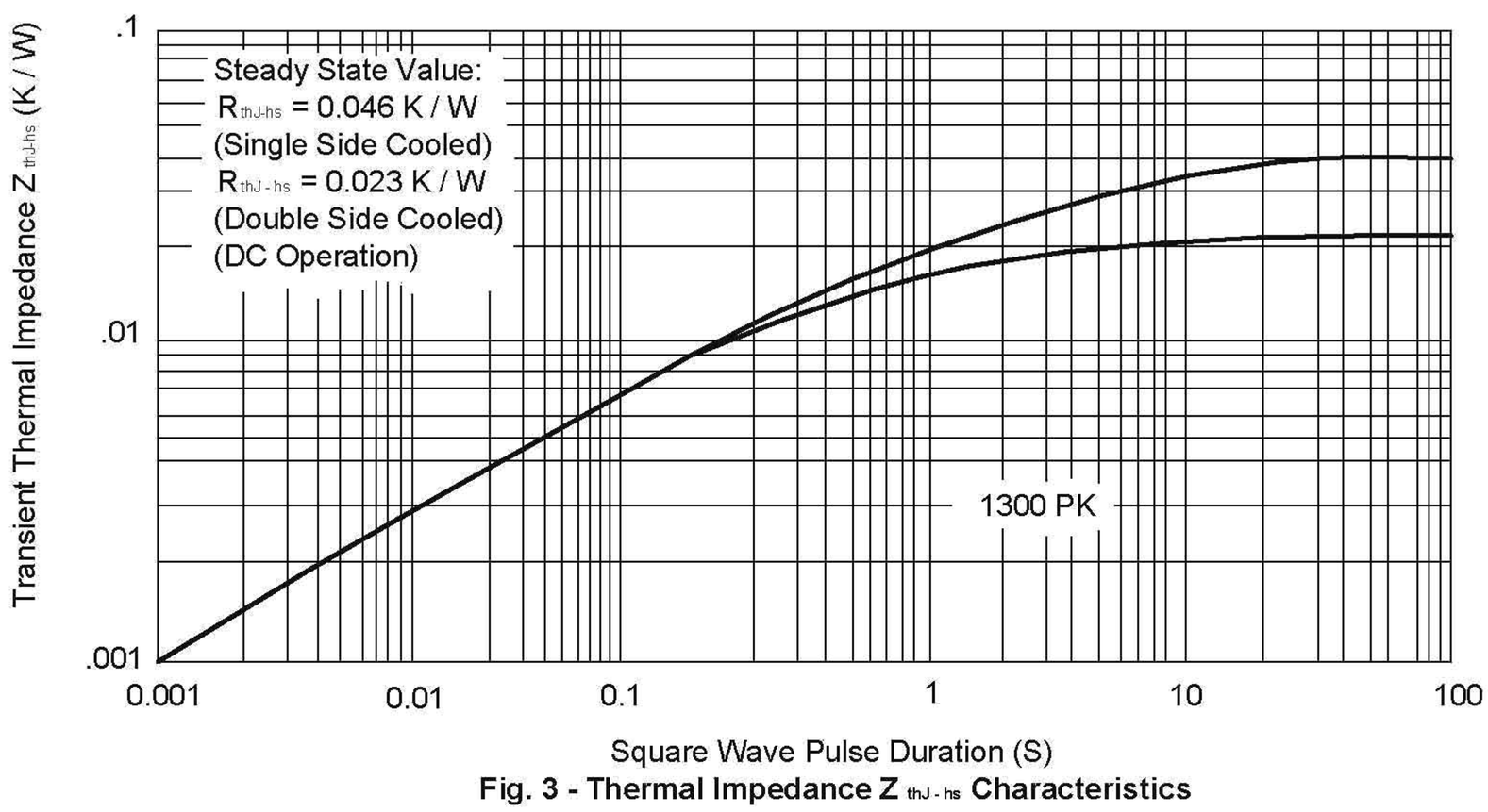


**Fig. 3 - Thermal Impedance $Z_{thJ-hs}$ Characteristics**