Ruttonsha International Rectifier Ltd.

SILICON CONTROLLED RECTIFIERS

High Power Thyristor
Hockey Puk Version
S-PUK Series 5000PS

Types : 5000 PS

5000 PS (S - PUK)

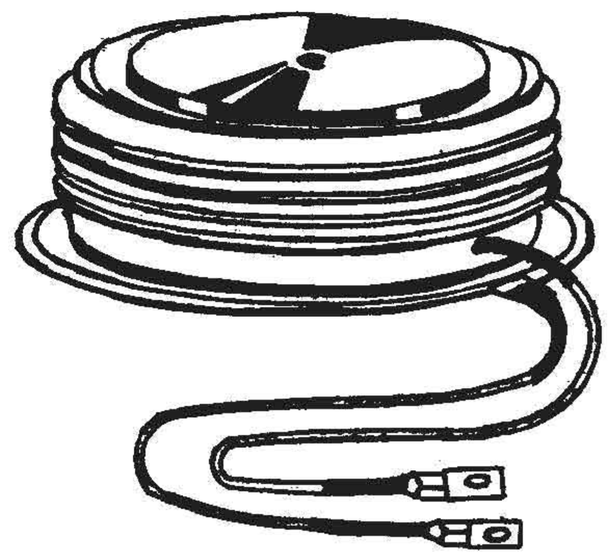

FEATURES

- *Center amplifying gate.*
- *Metal case with ceramic insulator*
- *High profile hockey - puk.*

TYPICAL APPLICATIONS

- *DC motor control (e.g. for machine tools).*
- *Controlled rectifiers (e.g. for battery charging, Uninterrupted Power Supply).*
- *AC controllers (e.g. for temperature control, lights control).*

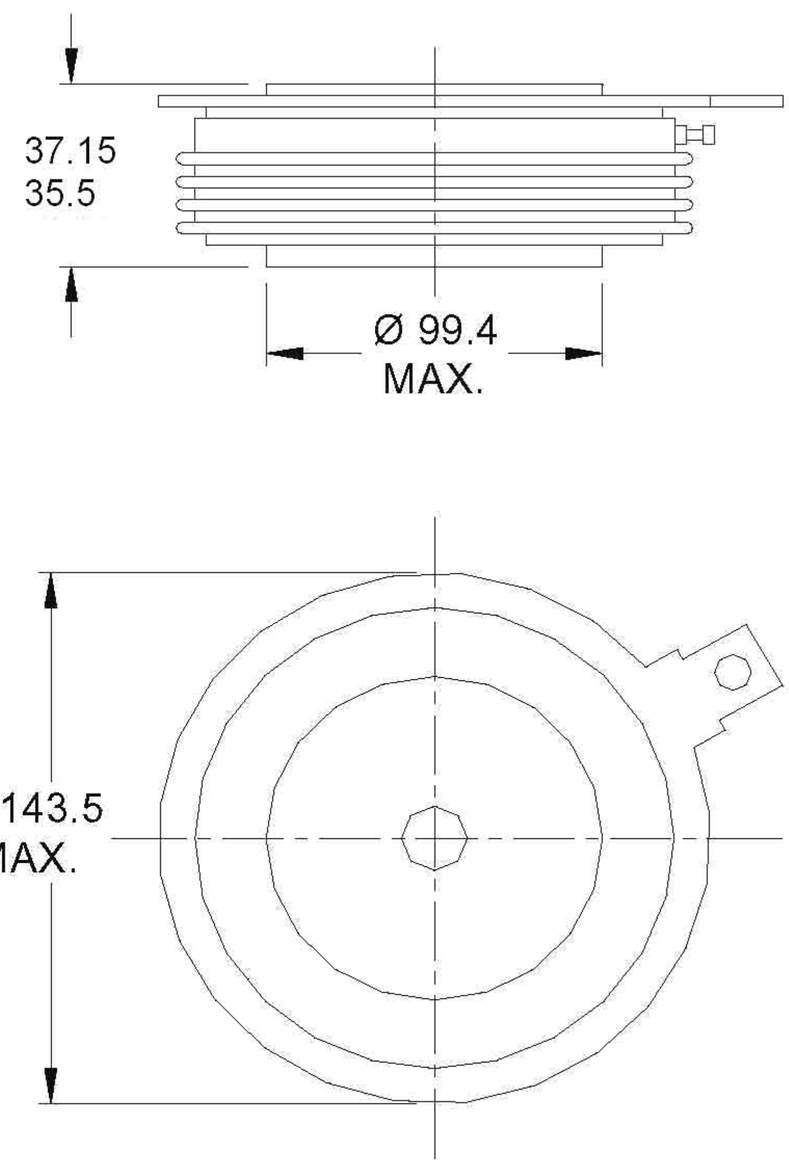

All dimension in millimeters

Major Ratings and Characteristics

Parameter		5000 PS	Units
$I_{T(AV)}$		5000	A
	@ T_{hs}	55	℃
$I_{T(RMS)}$		7850	A
	@ T_{hs}	55	℃
I_{TSM}	@ 50 Hz	60	KA
I^2t	@ 50 Hz	18000	KA^2s
V_{DRM}/V_{RRM}		1600 to 2800	V
t_q	typical	300	µs
T_J		125	℃

ELECTRICAL SPECIFICATIONS

5000 PS Series

Voltage Ratings

Type number	Voltage Code	V_{DRM}/V_{RRM}, max repetitive peak and off-state voltage V	V_{RSM},maximum non-repetitive peak voltage V	I_{DRM}/I_{RRM} max. @ $T_J = T_J$ max. mA
5000PS	160	1600 / 1600	1700	300
	180	1800 / 1800	1900	
	200	2000 / 2000	2100	
	220	2200 / 2200	2200	
	260	2600 / 2600	2700	
	280	2800 / 2800	2900	

On - state Conduction

	Parameter	5000 PS	Units	Conditions	
$I_{T(AV)}$	Max. average on-state current	5000	A	180° conduction, half sine wave	
	@ Heatsink temperature	55	°C	double side cooled	
$I_{T(RMS)}$	Max RMS on-state current	7850	A	DC@ 55°C heatsink temperature double side cooled	
I_{TSM}	Max. peak, one-cycle non-repetitive surge current	60	KA	t = 10 ms	Sinusoidal half wave, Initial $T_J=T_J$ max.
I^2t	Maximum I^2t for fusing	18000	KA^2s	t = 10 ms	
$V_{T(TO)}$	Threshold voltage	0.94	V	$T_J=T_J$ max	
r_t	On-state slope resistance	0.09	mΩ	$T_J=T_J$ max.	
V_{TM}	Max. on state voltage	1.3	V	I_{PK} = 4000A,$T_J=T_J$ max, t_P = 10 ms sine pulse	
I_H	Maximum holding current	600	mA	T_J = 25°C , anode supply 12 V resistive load	
I_L	Typical latching current	1000	mA	T_J = 25°C , anode supply 12 V resistive load	

5000PS Series

Switching

	Parameter	5000PS	Units	Conditions
di/dt	Max. non-repetitive rate of rise of turned-on current	100	A/µs	Gate drive 20V, 20Ω , $t_r \leq 1\mu s$ $T_J=T_J$ max. anode voltage ≤ 80% V_{DRM}
t_q	Typical turn-off time	300	µs	I_{TM} =1000A, $T_J=T_J$ max. di/dt = 5 A/µs ,V_R =100V dv/dt = 20V/µs, V_{DRM} 2000V, t_p = 500µs

Blocking

	Parameter	5000PS	Units	Conditions
dv/dt	Maximum critical rate of rise of off-state voltage	500	V/µs	$T_J = T_J$ max. linear to 67% rated V_{DRM}
I_{RRM} I_{DRM}	Max. peak reverse and off-state leakage current	300	mA	$T_J = T_J$ max. rated V_{DRM} /V_{RRM} applied

Triggering

	Parameter	5000PS	Units	Conditions
P_{GM}	Maximum peak gate power	50	W	$T_J = T_J$ max., $t_p \leq 5$ ms
$P_{G(AV)}$	Maximum average gate power	5		$T_J = T_J$ max., f = 50Hz, d% = 50
I_{GM}	Max. peak positive gate current	3.0	A	$T_J = T_J$ max., $t_p \leq 5$ ms
$+V_{GM}$	Maximum peak positive gate voltage	20	V	$T_J = T_J$ max., $t_p \leq 5$ ms
$-V_{GM}$	Maximum peak negative gate voltage	5.0		
		MAX.		
I_{GT}	DC gate current required to trigger	300	mA	T_J = 25°C
V_{GT}	DC gate voltage required to trigger	5.0	V	T_J = 25°C
I_{GD}	DC gate current not to trigger	15	mA	$T_J = T_J$ max.
V_{GD}	DC gate voltage not to trigger	0.25	V	

Max.required gate trigger/ current/voltage are the lowest value which will trigger all units 12 V anode-to-cathode applied

Max. gate current/voltage not to trigger is the max. value which will not trigger any unit with rated V_{DRM} anode-to-cathode applied

Thermal and Mechanical Specifications

	Parameter	5000PS	Units	Conditions
T_J	Max.operating temperature range	125	°C	
T_{stg}	Max.storage temperature range	125		
R_{thJ-hk}	Max. thermal resistance, junction to heat sink	0.0073	K/W	DC operation double side cooled
F	Mounting force, ± 10% ,	65	KN	
wt.	Approximate weight	3000	g	
	Case style	S-PUK		See Outline Table

SILICON CONTROLLED RECTIFIER

5000 PS Series

ON-STATE CHARACTERISTIC
Process Maximum

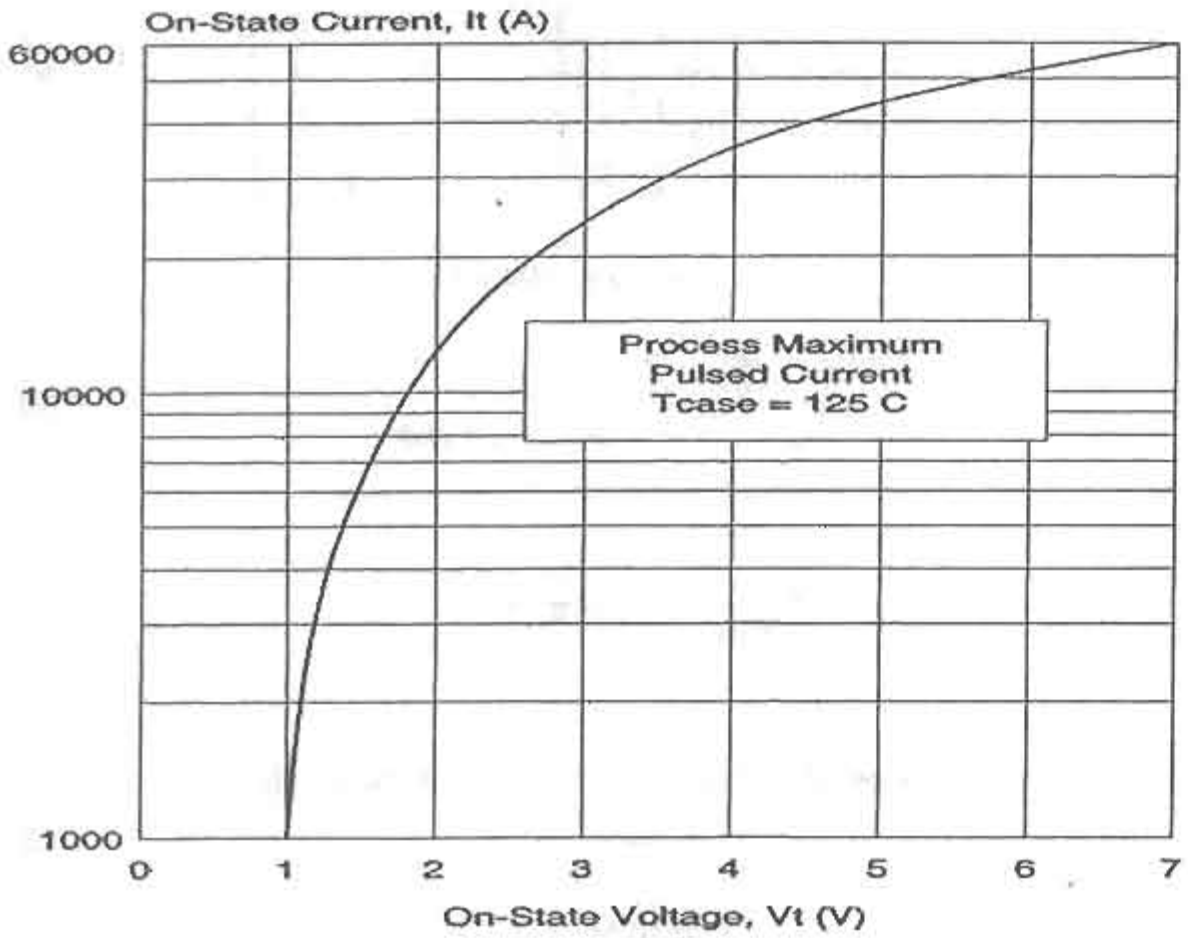

FULL CYCLE AVERAGE POWER LOSS
versus
PEAK CURRENT at 50/60 Hz
(plasma spreading and conduction loss)

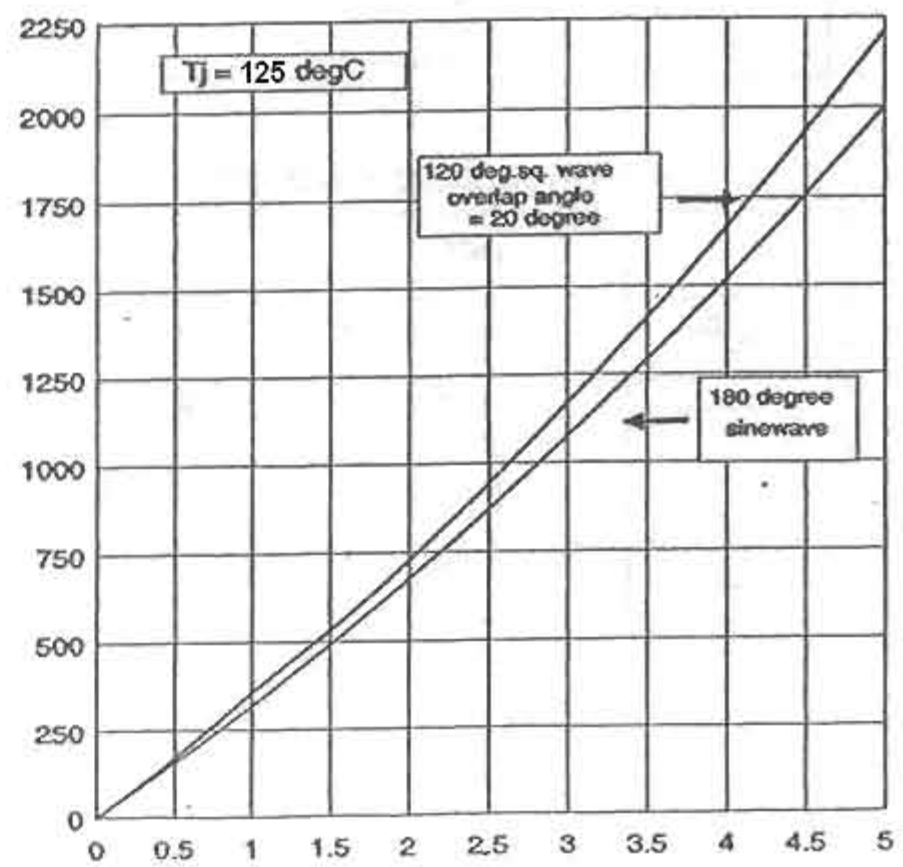
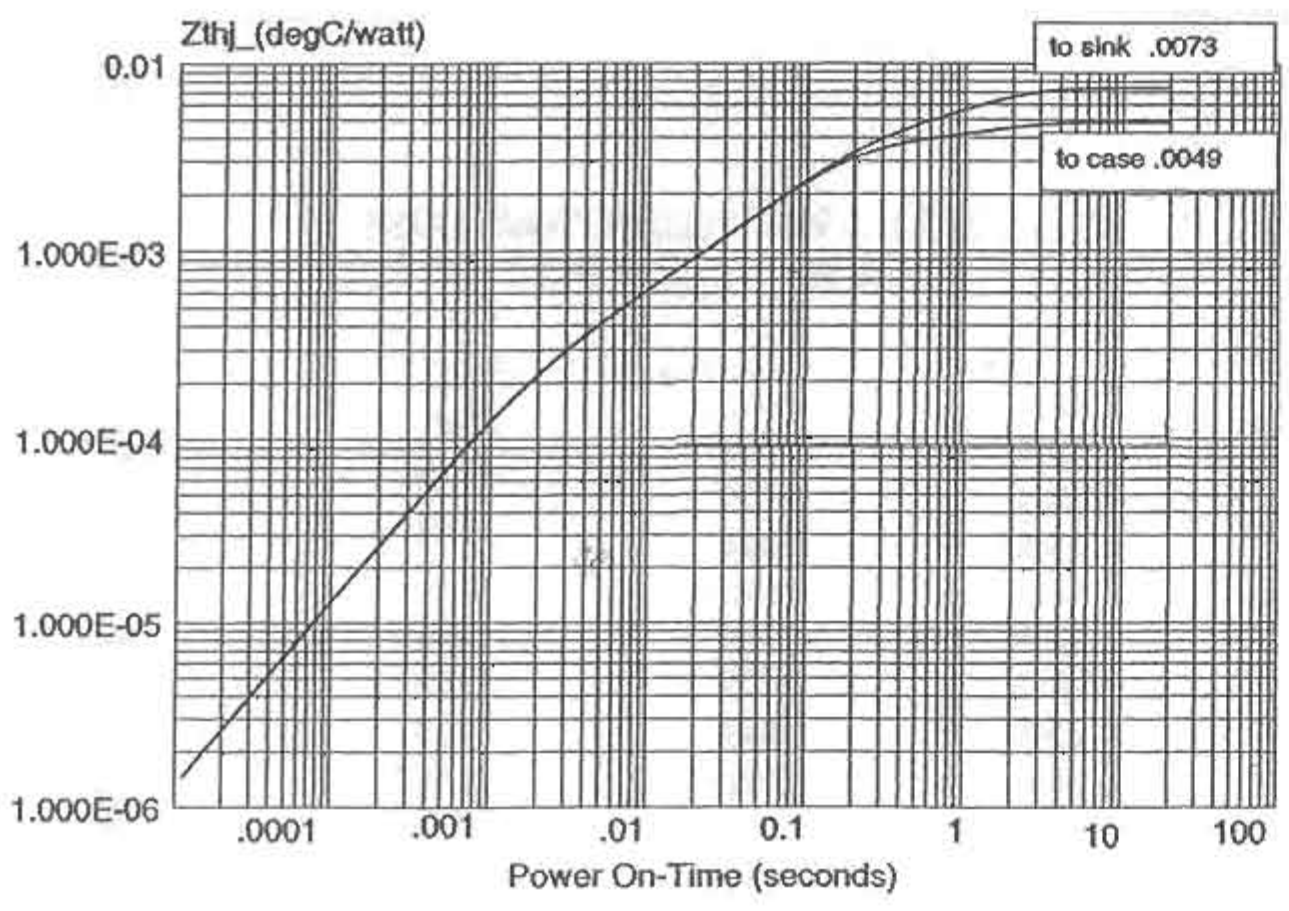
THERMAL IMPEDANCE vs. ON-TIME